2 way, 2 position logic spool valve type “V“

DPS2-10.-V-.-0-...-..

Motrac Hydraulik GmbH
Siemensring 87 - D-47877 Willich
fon +49-(0)2154-8162.0 - fax +49-(0)2154-8162.499
e-mail info.mhw@motracindustries.com
internet www.motracindustries.com

MD-750-104-00
(subject to change)

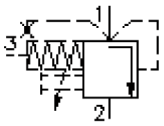

HEX 1"
(torque
cartridge:
48 - 54 Nm)

cavity:
C-10-3S
see
data-sheet no.:
IK-200-109-00

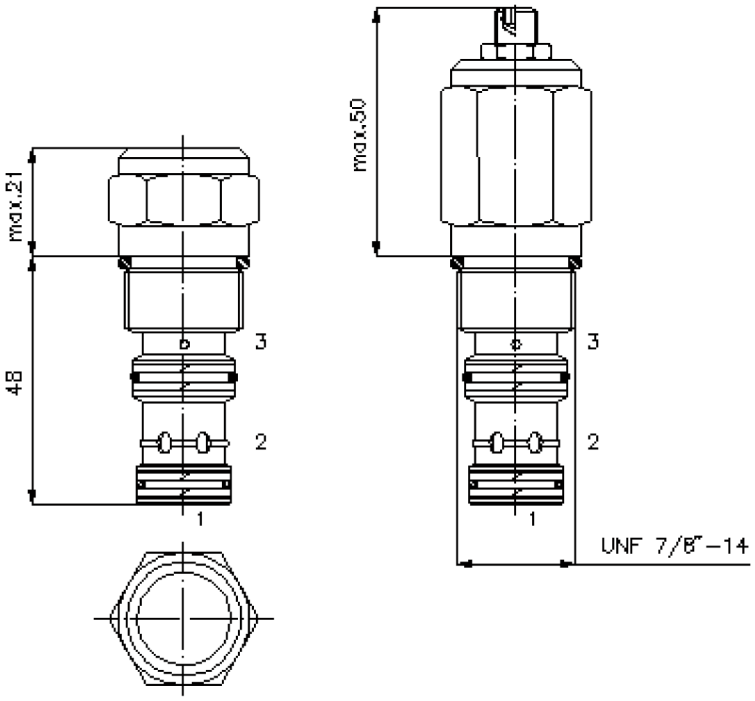

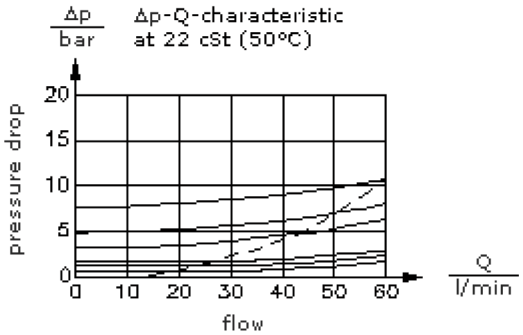

2 way, 2 position logic spool valve type “V“

DPS2-10.-V-.-0-...-..

Motrac Hydraulik GmbH
Siemensring 87 - D-47877 Willich
fon +49-(0)2154-8162.0 - fax +49-(0)2154-8162.499
e-mail info.mhw@motracindustries.com
internet www.motracindustries.com

MD-750-104-00
(subject to change)

Ordering example:

DPS2 - 10N - V - F - 0 - 040 - AA

A B C D E F G

Model code:

A **design**
logic valve

B **size and sealing**
10N = Buna (NBR)
10V = Viton (FPM)

C **spool type**
V = pressure reducing
base position closed

D **adjustment**
F = fixed
S = stroke limiter

E **construction**
0 = screw-in valve

F **crack pressure**
005 = 0.3 bar
010 = 0.7 bar
020 = 1.4 bar
040 = 2.8 bar
080 = 5.5 bar
160 = 11.0 bar

G **function mode**
00 = 210 bar variant
AA = 350 bar variant

Technical Data:

nominal pressure:	290 bar
nominal flow:	60 l/min
weight:	0.14 kg
temperature range:	-40°C to 120°C
fluids:	hydraulic oil as per DIN 51524 T1 (ISO TC 131)
max. leakage:	85 ccm/min at 22 cSt (50°C) and 350 bar
seals:	optional Buna (NBR) or Viton (FPM), as well as Teflon wascher (PTFE)
pilot ratio:	1 : 1
cavity:	C-10-3S see datasheet no. IK-200-109-00
housing:	3SLH-10.-B.. see datasheet no. IH-200-000-00
seal kit:	SP-MDS-10N-34S (NBR), SP-MDS-10V-34S (FPM)