3 way, 2 position screw-in valve piston-type “G“ (negative)

DCPS-10.-G-.-0-...

BUCHER hydraulics

Motrac Hydraulik GmbH
Siemensring 87 - D-47877 Willich
fon +49-(0)2154-8162.0 - fax +49-(0)2154-8162.499
e-mail info.mhw@motracindustries.com
internet www.motracindustries.com

CD-370-101-00
(subject to change)

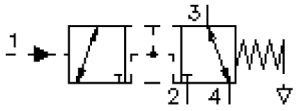

(open center position)

HEX 19 mm

HEX 27 mm (torque cartridge: 48 - 54 Nm)

cavity: C-10-4 see data-sheet no.: IK-400-109-00

HEW 8 mm

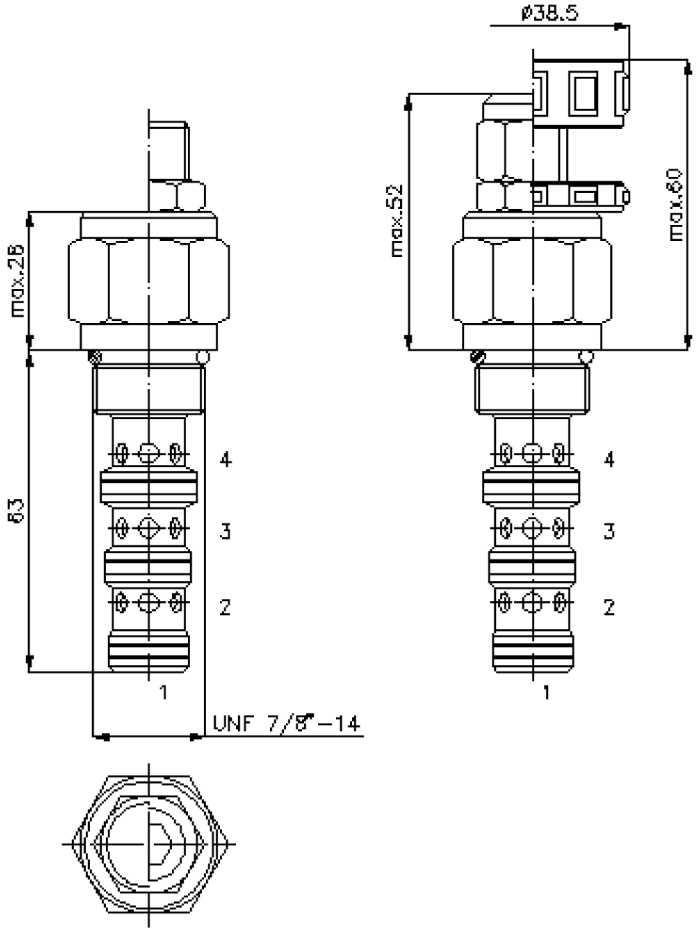

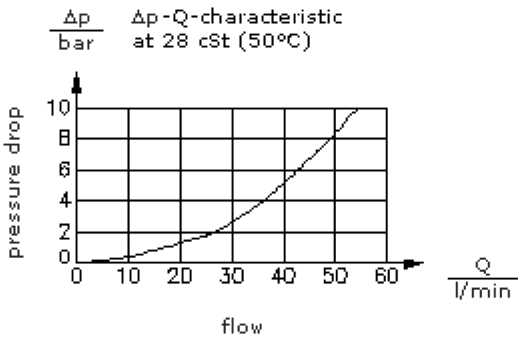

3 way, 2 position screw-in valve piston-type “G“ (negative)

DCPS-10.-G-.-0-...

BUCHER hydraulics

Motrac Hydraulik GmbH
Siemensring 87 - D-47877 Willich
fon +49-(0)2154-8162.0 - fax +49-(0)2154-8162.499
e-mail info.mhw@motracindustries.com
internet www.motracindustries

CD-370-101-00
(subject to change)

Ordering example:

DCPS	- 10N	- G	- C	- 0	- 200
A	B	C	D	E	F

Model code:

A **design**
directional valve
hydraulic release
spring centered
spool type valve

B **size and sealing**
10N = Buna (NBR)
10V = Viton (FPM)

C **spool type**
G = open center position

D **adjustment**
F = fixed
S = screw adjustment
C = cap
K = handknob

E **construction**
0 = screw-in valve

F **pilot pressure**
070 = 4.8 bar ("F" only)
100 = 6.9 bar ("F" only)
200 = 5.2 -13.8 bar ("S" only)

Technical Data:

nominal pressure:	350 bar
nominal flow:	45 l/min
weight:	0.21 kg
temperature range:	-40°C to 120°C
fluids:	hydraulic oil as per DIN 51524 T1 (ISO TC 131)
max. leakage:	85 ccm/min at 22 cSt (50°C)
seals:	optional Buna (NBR) or Viton (FPM), as well as Teflon wascher (PTFE)
cavity:	C-10-4 see datasheet no. IK-400-109-00 Review note!
housing:	4LH-10.-B.. see datasheet no. IH-400-000-00
seal kit:	SP-CDS-10N-13 (NBR), SP-CDS-10V-13 (FPM)